Copyright © 2007 SoftMotor Ltd - United Kingdom

Published - January 2007

OBSERVER BASED MEASUREMENT OF THE INPUT CURRENT OF A NEURON

K. Röbenack [1,*], P. Goel [2]

[1] Institut für Regelungs- und Steuerungstheorie, Technische Universität Dresden, Germany

[2] Laboratory of Biological Modeling, National Institutes of Health (NIDDK), Bethesda, MD, USA

Authors' electronic copy - For information only - Not for distribution

ABSTRACT

We propose a new technique that uses an observer to estimate the current input into a neuron whose voltage is measured electrophysiologically. As a by-product, one also obtains information about the gating variables of the ionic channels. We prove the global convergence of the observer for all voltage-gated ion channel models within the Hodgkin-Huxley formalism. The current observer can be implemented either offline or concurrently with the recording. We illustrate the workings of the observer on a well-known nonlinear neural model.

Keywords

Nonlinear Observer, Unknown Input Observer, Neuron, Electrophysiological.

1. INTRODUCTION

Neurons communicate through synapses: pre-synaptic neuronal membrane activity is transmitted across the synapse via neurotransmitters that activate post-synaptic currents to drive the neuron. Moreover, neurons exhibit subtle and complex membrane activity. This nonlinear response is influenced by both the intrinsic properties of the neuron as well as the state of the network [1, 2].

The membrane voltage of an isolated neuron can be recorded electrophysiologically, via an intracellular or extracellular electrode. This voltage change is mediated by internal ionic currents and the input current applied via the electrode. Thus, in order to understand the characteristics of neuronal activity, a neuron is stimulated with various current inputs, typically of the stepping or ramping type. Variously, the voltage of a neuron can also be clamped, i.e. held constant; in that case, currents can be measured. The ionic properties of the channels that comprise the membrane differ with the cell type. In addition, neurons of a certain type exhibit individual differences. Well-defined methods exist to characterize ion channel kinetics based on voltage- and current-clamping protocols. It is thus possible to build dynamical models of neuronal activity [3].

If a neuron in a network (tissue) is voltage-clamped, a current response is a measure of the input received by it from its pre-synaptic neighbours. Thus the effect of different inputs that approximate physiological stimuli can be studied. Unfortunately, this procedure is intrisically invasive. In particular, this technique of measurement will interfere with the neuron's activity in the network. What is required is a sensor that passively reports the current input without interfering with the voltage activity. In this paper we develop a method to determine the input current from the only available measurement, i.e., from the membrane voltage.

Most traditional experimental techniques involving electrophysiological measurements are open-loop: the neuron is stimulated with either current or voltage and the corresponding output is read-out. More recently, a feedback-based technique has become popular: the so called dynamic-clamp [4]. This allows, for example, the input current to a neuron to be modified based on the voltage output. This powerful technique has enabled the study of neuronal networks that are coupled to computer models in real-time. Dynamic clamping thus paves the way for the investigation of complex combinations of coupled organic and artificial networks. A passive observer of current is an ideal tool that can be used in combination with the dynamic clamp to measure how global stimuli applied to the system are transduced to presynaptic current patterns at various individual neurons.

Mathematical models describing membrane dynamics in neurons typically follow the formalism first described by Hodgkin and Huxley [5]. The membrane voltage is given by a system of ordinary differential equations, where the voltage dynamics is coupled to several gating variables, which describe the behavior of the ion channels in the membrane. The dynamics of the membrane voltage V is governed by

$$C\dot{V} = I - \sum_j g_j \cdot \left(V - V_j\right) \tag{1}$$

with a capacitance $C > 0$. The current I is injected into the cell, either applied via an intracellular electrode, or from pre-synaptic coupling to other cells. The sum on the right hand side of (1) represents other currents which influence the voltage dynamics, e.g. the leak current and currents flowing through ionic channels. The associated electrochemical gradients are represented by constant voltages V_j called

*Corresponding author: *E-mail:* klaus@roebenack.de

All Rights Reserved. No part of this work may be reproduced, stored in retrieval system, or transmitted, in any form or by any means, electronic, mechanical, photocopying, recording, scanning or otherwise - except for personal and internal use to the extent permitted by national copyright law - without the permission and/or a fee of the Publisher.

Copyright © 2007 SoftMotor Ltd. ISSN: 1743-9310

reversal potentials. The conductance g_L associated with the leak current is constant. In case of the other currents, the conductances g_j depend on so-called gating variables w_i. More precisely, each conductance g_j usually consists of the maximal value of the conductance multiplied with non-negative integral powers of some w_i. The dynamics of these gating variables is governed by differential equations of the form

$$\dot{w}_i = \alpha_i(V)(1-w_i) + \beta_i(V)w_i \quad \text{for} \quad i = 1, \ldots, p. \tag{2}$$

The functions $\alpha_i(V)$ and $\beta_i(V)$ are positive for all V. Eq. (2) result from a Markov model of the ith ionic channel. Each channel has two states: open and closed. The functions $\alpha_i(V)$ and $\beta_i(V)$ denote the transition rates for opening and closing, respectively. The gating variable w_i denotes the probability that the ith channel is in the open state. The number p of equations (2) depends on the selected model. The whole model (1)-(2) is a system of first order nonlinear ordinary differential equations.

From a control-theoretic point of view, system (1)-(2) is a single-input single-output state-space system with the input I and the state variables V and $w = (w_1, \ldots, w_p)^T$. The output V is measured. We propose a two-stage approach to estimate the input I. First, we design an observer to obtain the state vector w. Second, we use the information provided by the observer to obtain an estimate of the input I using a filter.

We will use an observer to estimate those quantities of (1)-(2) which are not measured directly. The problem of observer design has received significant attention during the last decades [6-8]. Classical observers provide an estimate of the state based on input and output information [8]. These observers are not applicable since the input I is not measured.

Extensions of observer theory have been made to systems with unmeasured inputs. These observers are called unknown input observers. The existence conditions for unknown input observers of linear time invariant systems are well-known [9-11]. For nonlinear systems, the existence conditions of unknown input observers are not well established. Design methods exist only for special classes of nonlinear systems. The design method proposed in [12, 13] is based on a certain decomposition of the system into two subsystems. In turns out that systems of the class (1)-(2) are already decomposed into this special form. We will employ this approach to design an unknown input observer to estimate the unmeasured state vector w.

The problem of real-time observation of an input occurs also in communication by chaotic signals [14]. In theory, we would use the inverse system approach suggested in [15, 16]. In that case, however, we have to differentiate the measured output numerically. Unfortunately, numerical differentiation by divided difference schemes in not reliable. To circumvent this problem, we design an additional low-pass filter to generate a smoothed estimate of the input.

This paper is structured as follows. In Section 2 we derive our estimation algorithm. We apply our method to a particular cell model in Section 3. The conclusions are given in Section 4.

2. OBSERVER AND FILTER DESIGN

First, we discuss the possible usage of conventional observers. Next, we design an unknown input observer of the system and show its convergence. Finally, a filter is employed to estimate the input.

2.1 Conventional Observers

The class of models described by (1)-(2) has the form

$$C\dot{V} = f(V, \mathbf{w}) + I \tag{3}$$

$$\dot{\mathbf{w}} = \mathbf{g}(V, \mathbf{w}) \tag{4}$$

with the measured output V and the unknown initial value w_0. The first subsystem (3) is 1-dimensional, whereas the dimension p of the second subsystem (4) depends on the model under consideration. Note that maps f and g are nonlinear.

In the beginning, we discuss the design of the observer to estimate the unknown state variables. In the last decades, several techniques for a systematic observer design have been developed [6-8, 17]. Most of these methods are not directly applicable because they require an explicit knowledge of the input signal. Therefore, we have to modify the model (3)-(4). A possible approach is to assume that the input signal varies slowly or changes only occasional between different regimes. In other words, we assume that the input signal is "almost" constant. This information can be incorporated into the model by an augmentation of (3)-(4) with a further differential equation $\dot{I} = 0$. The resulting $(p+2)$-dimensional model

$$\begin{aligned} C\dot{V} &= f(V, \mathbf{w}) + I \\ \dot{\mathbf{w}} &= \mathbf{g}(V, \mathbf{w}) \\ \dot{I} &= 0 \end{aligned} \tag{5}$$

is autonomous. This augmentation of the original system is a common approach in observer-based parameter estimation [18, 19]. Indeed, this idea is also used to design observers for systems with unmeasurable inputs [9]. Theoretically, one could apply arbitrary observer design methods to (5). In fact, we tried this approach in the beginning.

For linear systems, the observer design problem has been solved by Luenberger [20, 21], see also references cited in [22]. The design procedures of linear systems can be applied to the linearization of a nonlinear system, provided the systems trajectory stays in a neighbourhood of a given operating point. Unfortunately, this is not the case here, because the system shows large oscillations.

The first mathematically justified approach to design observers for nonlinear systems was developed by Thau [23]. The idea is to dominate the nonlinearities by a sufficiently large linear part in the error dynamics. The choice of the observer gain vector is not based on a local linearization but on global Lyapunov techniques [24, 25]. These design methods did not work for our systems because the large observer gains made the numerical integration of the observer's equations utterly impossible.

The development of differential geometric methods in nonlinear control gave rise to a whole class of new observer

design methods [26-30]. For all these methods, to obtain the observer gain one needs to compute certain Lie derivatives symbolically. The systems in our application are highly nonlinear. We obtained very large and complicated expressions for the observer gains (thousands of lines of C code). At best, the resulting observer did not diverge, but we were not able to extract a reasonable estimate for *I*.

For our point of view, conventional observer design techniques are not suitable to solve our estimation problem.

2.2 Unknown Input Observers

Now, we will design an unknown input observer. Design procedures are well-established for linear time-invariant systems [9-11]. Only a limited number of design methods exist for nonlinear systems. Our approach is based on [12, 13]. We take the structure of system (3)-(4) into account. This system is already decomposed into two subsystems. The crucial point is that the second subsystem (4) depends not explicitly on the input *I*. More precisely, system (3)-(4) is already in the Byrnes-Isidori normal form with relative degree one [31].

The state V of the first subsystem (3) is measured. As an observer for w we suggest a copy of subsystem (4), which is driven by the measured output:

$$\dot{\hat{\mathbf{w}}} = \mathbf{g}(V, \hat{\mathbf{w}}), \quad \hat{\mathbf{w}}(0) = \hat{\mathbf{w}}_0 \in \Re^p. \tag{6}$$

The observation error $\tilde{w} = w - \hat{w}$ is governed by the error dynamics

$$\dot{\tilde{\mathbf{w}}} = \mathbf{g}(V, \mathbf{w}) - \mathbf{g}(V, \hat{\mathbf{w}}), \quad \tilde{\mathbf{w}}(0) = \mathbf{w}_0 - \hat{\mathbf{w}}_0. \tag{7}$$

The trajectory $\hat{w}$ of the observer (6) converges to the state w of (4) for $t \to \infty$ if the equilibrium $\tilde{w} = 0$ of the error dynamics (7) is asymptotically stable uniformly in V. In other words, we assume that for all V we have $\tilde{w}(t) = w(t) - \hat{w}(t) \to 0$ as $t \to \infty$. Then, subsystem (4) is said to have a steady state solution property [32]. We will show in Section 2.3 that the class of systems discussed here poses this property. Since the state of subsystem (3) is already known by measurement, the whole system (3)-(4) is detectable [32].

In contrast to conventional observers, we have no observer gain to adjust the convergence rate of the observer (6). In so far, our observer is similar to so-called asymptotic observers known from biological and chemical process control [33, 34]. Moreover, observer (6) is a reduced observer since we reconstruct only subsystem (4). Combining the measured voltage V and the observer trajectory $\hat{w}$ yields an estimation of the whole state of (3)-(4), even though the input I is unmeasured.

2.3 Stability Analysis

We show here that the observer (6) converges globally. In particular, we also claim that this type of observer is applicable to all cell models of the Hodgkin-Huxley type [5]. In addition to the Connor-Stevens model which will be introduced in Section 3, this class of models includes several other well-known models such as the Morris-Lecar model [35], the FritzHugh-Nagumo model [36, 37], and the Traub model [38, 39], to name a few. If additional information is available, it is possible to extend the current observer we present here to other ion channels that are not just voltage-gated, but are also modulated by intracellular activity, e.g. to use the observer with a bursting model of pancreatic beta-cells [40], simultaneous measurements of calcium and adenosine triphosphate (ATP) would be required.

In our application, we consider models of the type (3)-(4), whose underlying structure is given by (1)-(2). The observer (6) is designed for the p equations of the type (2) with functions $\alpha_i(V)$ and $\beta_i(V)$. To prove the convergence of the observer we consider the difference between the original system and the observer. We show that this difference goes to zero using Lyapunov stability theory.

The equations (2) of system (4) have the form

$$\begin{aligned} \dot{w}_i &= \alpha_i(V)(1 - w_i) + \beta_i(V) w_i \\ &= \alpha_i(V) - (\alpha_i(V) + \beta_i(V)) w_i \end{aligned} \tag{8}$$

for $i = 1, \ldots, p$. The corresponding observer

$$\dot{\hat{w}}_i = \alpha_i(V) - (\alpha_i(V) + \beta_i(V))\hat{w}_i \tag{9}$$

with the initial value $\hat{w}_i(t) \in \Re$ is excited by the measured voltage V. The observation error of the ith gating variable is defined by $w_i = w_i - w_i$. The associated error dynamics is governed by

$$\dot{\tilde{w}}_i = \dot{w}_i - \dot{\hat{w}}_i = -(\alpha_i(V) + \beta_i(V))\tilde{w}_i \tag{10}$$

with an initial value $\tilde{w}_i(0) = w_i(0) - \hat{w}_i(0)$. We use the continuously differentiable candidate Lyapunov function

$$\Upsilon(\tilde{\mathbf{w}}) = \frac{1}{2}\sum_{i=1}^{p} \tilde{w}_i^2$$

with the vector-valued argument $\tilde{w} = (\tilde{w}_1, \ldots, \tilde{w}_p)$. The function Y is positive definite since it is a quadratic form, i.e., $Y(0) = 0$ and $Y(\tilde{w}) > 0$ for all $\tilde{w} \neq 0$. Moreover, Y is radially unbounded, i.e., $Y(\tilde{w}) \to \infty$ for $\|\tilde{w}\| \to \infty$. The total derivative of $Y(\tilde{w})$ along the error dynamics (10) is calculated as

$$\dot{\Upsilon}(\tilde{\mathbf{w}}) = \sum_{i=1}^{p} \tilde{w}_i \dot{\tilde{w}}_i = -\sum_{i=1}^{p} (\alpha_i(V) + \beta_i(V))\tilde{w}_i^2.$$

The quadratic terms are always non-negative. If $\tilde{w}$ is not the zero vector, at least one term w_i^2 is strictly positive. Moreover, we have $\alpha_i(V), \beta_i(V) > 0$ for all V by construction. (Recall that these functions are transition rates resulting from a Markov model.) Therefore, we have $\dot{Y}(\tilde{w}) < 0 \quad \forall \tilde{w} \neq 0$.

Hence, by Lyapunov's Theorem [41], the equilibrium $\tilde{w} = 0$ of (10) is globally asymptotically stable, i.e., $\tilde{w}(t) \to 0$ for $t \to \infty$ and any initial value $\tilde{w}(0) \in \Re^p$. This implies $\hat{w}(t) \to w(t)$ for $t \to \infty$, that is, the trajectory $\hat{w}(t)$ of the observer (9) converges to the trajectory $w(t)$ of the original system (8) for $t \to \infty$.

2.4 Input Estimation

Now, we make use of the information generated by the observer (6) to obtain an estimate of the current I. For known

trajectories of V and w we could compute the input I exactly from (3) by

$$I = C\dot{V} - f(V, \mathbf{w}) \tag{11}$$

Since w is not available directly but estimated by the observer (6), we consider an estimate $\hat{I}$ of I defined by

$$\hat{I} = C\dot{V} - f(V, \hat{\mathbf{w}}) \tag{12}$$

For a continuous map f we have $\hat{I}(t) \to I(t)$ for $t \to \infty$ if $\hat{w}(t) \to w(t)$ for $t \to \infty$, i.e., the estimation (12) converges to the exact input (11) provided the observer (6) converges to subsystem (4). Using the inverse system approach [15, 16], one would estimate I by (12). However, we measure V but not its time derivative $\dot{V}$. A numerical computation of $\dot{V}$ from V by divided differences provides only a rough estimate of the derivative.

Up to now, we assumed that the voltage V generated from (3)-(4) is exactly known. In practical applications we also have to take disturbances such as noisy measurement into account. More precisely, we augment the exactly known voltage V by an additive disturbance signal ε. If we replace V in Eq. (12) by the measured voltage $(V + \varepsilon)$, the estimated current $\hat{I}$ would not only depend on the disturbance ε but also on its time derivative $\dot{\varepsilon}$. This is disadvantageous especially if the disturbance signal is indeed random noise.

To avoid an explicit computation of $\dot{V}$ and to attenuate the influence of the disturbance ε we use a filter. More precisely, for the right hand side of (12) we use a low-pass filter with a continuous time transfer function

$$T(s) = \frac{1}{1 + a_1 s + a_2 s^2 + \cdots + a_r s^r} \tag{13}$$

of order $r \geq 1$. The coefficients $a_1, \ldots, a_r$ have to be chosen such that all poles of (13) are in the open left half plane. In the time domain, a filter given by (13) is a linear operator. In the following, we denote the action of a filter with the transfer function T on the signal $\hat{I}$ by $T \circ \hat{I}$. The application of (13) to (12) yields the filtered signal

$$\begin{aligned} \bar{I}(t) &= T(s) \circ \hat{I}(t) \\ &= C \cdot T(s) \circ \dot{V}(t) - T(s) \circ f(V(t), \hat{\mathbf{w}}(t)). \end{aligned} \tag{14}$$

We assume that $V(t) = 0$ for $t < 0$. Between V and its time derivative $\dot{V}$ there holds $\boldsymbol{L}\{\dot{V}\} = s\boldsymbol{L}\{V\} - V(-0)$, where $\boldsymbol{L}$ denotes the Laplace transform. This results in $T \circ \dot{V} \equiv sT(s) \circ V$, i.e., instead of filtering the time derivative $\dot{V}$ by (13) we filter the measured trajectory V by

$$\frac{s}{1 + a_1 s + a_2 s^2 + \cdots + a_r s^r}. \tag{15}$$

The filtered estimate (14) is obtained by

$$\bar{I}(t) = sCT(s) \circ V(t) - T(s) \circ f(V(t), \hat{\mathbf{w}}(t)). \tag{16}$$

Taking the common denominator of (13) and (15) into account, Eq. (16) can equivalently be written

$$\bar{I}(t) = \frac{sCV(t) - f(V(t), \hat{\mathbf{w}}(t))}{1 + a_1 s + a_2 s^2 + \cdots + a_r s^r}. \tag{17}$$

In (17), the numerator degree does not exceed the denominator degree, i.e., the transfer function is proper. Hence, the filter (17) can be implemented without differentiators. The whole estimation scheme is shown in Fig. 1.

The purpose of the filter is to enhance the desired signal $\hat{I}$ relative to disturbances such as noise. Here, the filtering is done on the basis of a suppression of selected frequencies to damp interfering signals. Since the current I is nearly constant, a natural choice for the filter is a low-pass. The most important parameter of a low-bass filter is its cut-off frequency ω_o, at which the gain drops by some specified amount. Although there are many possibilities to design a low-pass filter, in most applications Butterworth, Bessel, Chebyshev and Cauer (or elliptic) filters are used [42]. For our experiments we employed a Bessel low-pass filter.

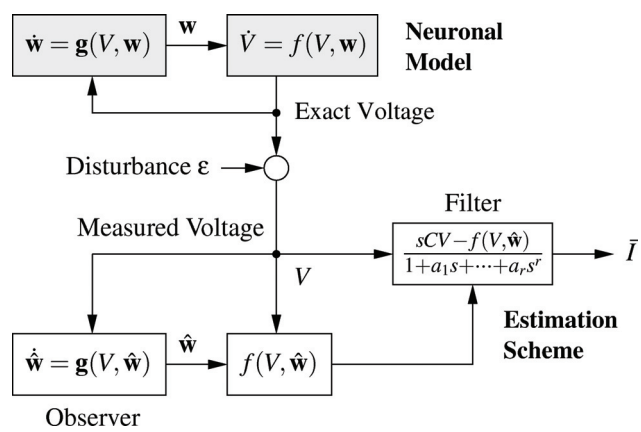

Figure 1. Reconstruction scheme for current I based on measurement of voltage *V*

3. APPLICATION TO THE CONNOR-STEVENS MODEL

We demonstrate the estimation algorithm on a cell model derived by J. A. Connor and C. F. Stevens [43]. Like the Hodgkin-Huxley model of nerve activity of the squid giant axon, the Connor-Stevens model describes important aspects of the biophysical behaviour of gastropod neuron somas. Here, in addition to the delayed-rectifier potassium, fast sodium and leak currents as in the Hodgkin-Huxley model, there is also an A-type potassium current. It is a well-studied model of Type 1 excitability: its periodic activity is the result of a saddle node bifurcation at current threshold [44, 45]. Several neurons, including the regular-spiking neurons of the somatosensory cortex display Type 1 behavior. For a more complete discussion of neuronal activity from the point of view of bifurcation theory we point to [2, 46].

The voltage dynamics read as

$$C\dot{V} = I - I_{Na} - I_K - I_L - I_A \tag{18}$$

with the input current I and $C = 1\mu F/cm^2$. The model has a leak current I_L, one current I_{Na} for the sodium ions (Na^+), and two currents I_K and I_A for the potassium ions (K^+). These currents are given by

$$\begin{aligned} I_{Na} &= g_{Na} m^3 h (V - V_{Na}) \\ I_K &= g_K n^4 (V - V_K) \\ I_L &= g_L (V - V_L) \\ I_A &= g_A a^3 b (V - V_A) \end{aligned} \tag{19}$$

with the conductances $g_K = 20mS/cm^2$, $g_{Na} = 120mS/cm^2$, $g_L = 0.3mS/cm^2$, $g_A = 47.7mS/cm^2$, the reversal potentials $V_{Na} = 55mV$, $V_K = -72mV$, $V_L = -17mV$, $V_A = -75mV$, and the dimensionless gating variables m, h, n, a, b. The equivalent circuit representation of Eqs. (18) and (19) is shown in Fig. 2.

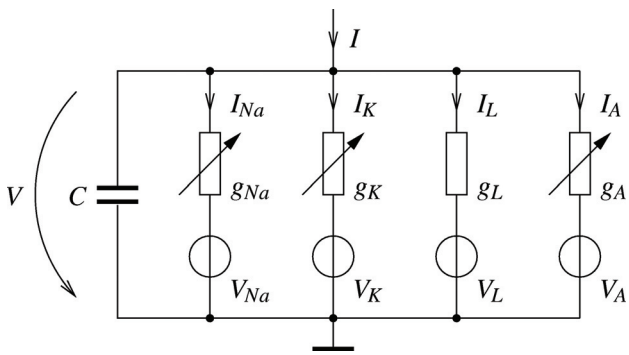

Figure 2. Equivalent circuit representation of the Connor-Stevens model (19)

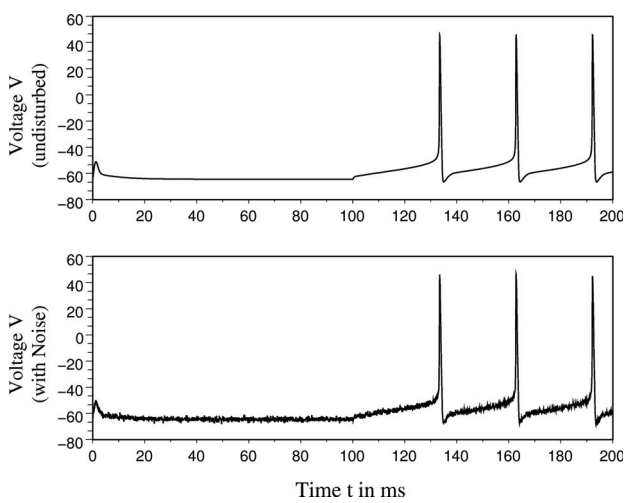

Figure 3. Output voltage generated from the Connor-Stevens model without and with measurement noise

The gating variables m, h, n influence the ionic currents I_{NA} and I_K. The additional ionic current I_A depends on the gating variables a and b. Although both currents I_K and I_A are carried by potassium ions, the model does not require that the reversal potentials V_K and V_A are equal. The gating variables are governed by the differential equations

$$\begin{aligned} \dot{m} &= \alpha_m(V)(1-m) - \beta_m(V)m \\ \dot{h} &= \alpha_h(V)(1-h) - \beta_h(V)h \\ \dot{n} &= \alpha_n(V)(1-n) - \beta_n(V)n \\ \dot{a} &= \frac{a_\infty(V) - a}{\tau_a(V)} \\ \dot{b} &= \frac{b_\infty(V) - b}{\tau_b(V)} \end{aligned} \tag{20}$$

with the functions

$$\begin{aligned} \alpha_m &= \frac{0.38(V+29.7)}{1-\exp(-0.1(V+29.7))} \\ \alpha_h &= 0.266\exp(-0.05(V+48)) \\ \alpha_n &= \frac{0.02(V+45.7)}{1-\exp(-0.1(V+45.7))} \\ \beta_m &= 15.2\exp(-0.0556(V+54.7)) \\ \beta_h &= \frac{3.8}{1+\exp(-0.1(V+18))} \\ \beta_n &= 0.25\exp(-0.0125(V+55.7)) \end{aligned}$$

and

$$\begin{aligned} a_\infty &= \left(\frac{0.0761\exp(0.0314(V+94.22))}{1+\exp(0.0346(V+1.17))}\right)^{1/3} \\ \tau_a &= 0.3632 + \frac{1.158}{1+\exp(0.0497(V+55.96))} \\ b_\infty &= \left(\frac{1}{1+\exp(0.0688(V+53.3))}\right)^4 \\ \tau_b &= 1.24 + \frac{2.678}{1+\exp(0.0624(V+50))}. \end{aligned}$$

The first three equations of (20) are already in the form (2), and the last two equations of (20) can easily be rewritten into (2).

For the simulation we use the initial values $V(0) = -64.453mV$, $m(0) = 0.0159$, $h(0) = 0.9437$, $n(0) = 0.196$, $a(0) = 0.0559$, $b(0) = 0.2175$ and the current signal

$$I(t) = \begin{cases} 5\,mA & \text{for} \quad 0\,ms \le t \le 100\,ms \\ 10\,mA & \text{for} \quad t > 100\,ms. \end{cases} \tag{21}$$

This signal can be interpreted as follows: For $t = 0, \ldots, 100\ ms$, a low value of background activity leaves the neuron close to its resting state. At $t = 100\ ms$, a stimulus arrives at the neuron and kicks the neuron with an excitation and induces a repetitive firing. From a mathematical point of view, this qualitative change in the system's behaviour is due to a saddle-node bifurcation that gives rise to oscillations

emerging with arbitrarily low frequencies. The resulting oscillations are shown on the top of Fig. 3.

The measured voltage of the Connor-Stevens model (18)-(20) is used to reconstruct the other state variables m, h, n, a and b. The unknown input observer (6) consists of a copy of Eqns. (20), which are driven by the measured voltage V of (18):

$$\begin{aligned}
\dot{\hat{m}} &= \alpha_m(V)(1-\hat{m}) - \beta_m(V)\hat{m} \\
\dot{\hat{h}} &= \alpha_h(V)(1-\hat{h}) - \beta_h(V)\hat{h} \\
\dot{\hat{n}} &= \alpha_n(V)(1-\hat{n}) - \beta_n(V)\hat{n} \\
\dot{\hat{a}} &= \frac{a_\infty(V)-\hat{a}}{\tau_a(V)} \\
\dot{\hat{b}} &= \frac{b_\infty(V)-\hat{b}}{\tau_b(V)}
\end{aligned} \tag{22}$$

Since we have no further knowledge of these variables at $t = 0$, we use the zero vector of $\Re^5$ as an initial value of the observer (22). The simulation was performed with Simulink®, where the two subsystems of (18)-(20) are implemented as so-called S-functions [47]. The simulation results shown in Fig. 4 indicate that the unknown input observer (22) converges.

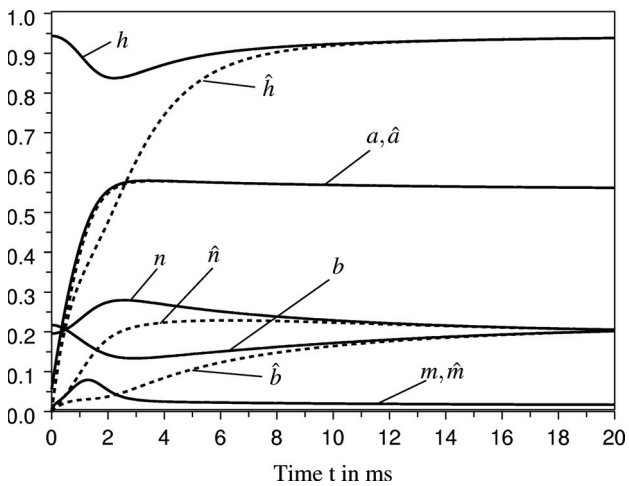

Figure 4. Trajectories of Connor-Stevens model and the unknown input observer (22)

In addition to the ideal case of an undisturbed voltage measurement we also consider the perturbed case. In particular, to the output voltage V of (18) we add band-limited discrete time white noise with sample time $0.1ms$ and power 0.1. The output voltages with and without noise are shown in the aforementioned Fig. 3. To estimate the current I by (16) we need to choose a low-pass filter and the poles of the transfer function (13). For the suppression of the artificially introduced measurement noise we use a 4th order Bessel filter. First, the filter is designed with a cut-off frequency $\omega_o = 1$ *rad/ms*. The filtered current $\bar{I}$ for the unperturbed case and for five realizations of random output perturbations is shown on the top of Fig. 5. Although the increase of I from $5mA$ to $10mA$ at $t = 100$ *ms* can be deduced from a visual inspection, the level of the perturbations is not yet satisfying. For a better suppression of the noise we decrease the cut-off frequency of the filter to $\omega_o = 0.1$ *rad/ms*. The result is also shown on the bottom in Fig. 5. As expected, we obtain relatively smooth curves for $\bar{I}$. The drawback of a lower cut-off frequency is a slower transient behaviour. In general, after some transients we obtain a good estimate $\bar{I}$ of I. However, we still have some deviations from the exact values of I at $t \approx 145$, $t \approx 170$, and $t \approx 200$ *ms*. At this point we should recall that the combination of the nonlinear unknown input observer (6) with the linear filter (13) yields a nonlinear filtering scheme.

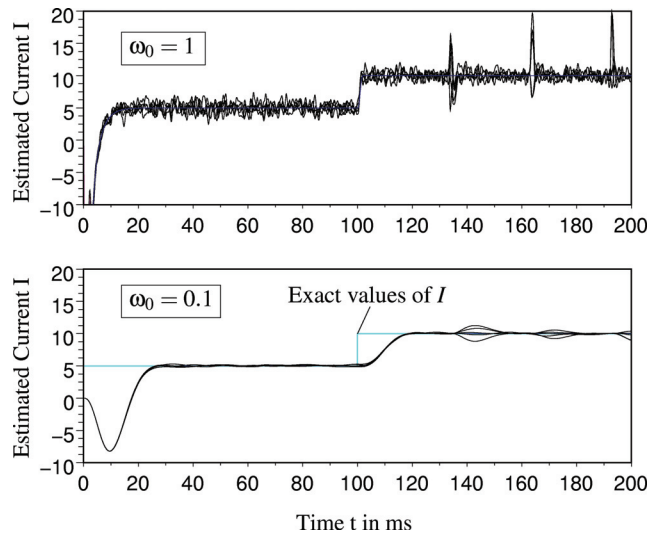

Figure 5. Estimated current $\bar{I}$ for the Connor-Stevens model

4. CONCLUSIONS

A direct measurement of the synaptic input driving a neuron, especially in vivo, is a challenging problem. We have presented here an observer based technique useful for determining the current input into a neuron whose membrane voltage is measured directly. Observers for synaptic current could be used to implement a sensor with a minimal of interference in vivo. Theoretically, they solve the inverse problem of determining the input from the measured output. Additionally, the observer also recovers the time courses of the gating variables which cannot be directly measured. Such a capability clearly enlarges the scope of useful information that can be obtained from electrophysiological recordings. An observer for synaptic current can be used quite generally in any context that a neuron is recorded from, and especially effectively in studying small networks. They can thus have a variety of practical applications.

During the last decades, several conductance based neural models have been developed after the fashion of Hodgkin and Huxley [5]. On the other hand, mathematical analyses of the dynamical properties of neurons continue to provide considerable understanding of the behavior of neuronal networks from a theoretical point of view. Current observers can potentially be used for a direct and independent verification of theoretical models. The technique of effective current observers promises to bridge the gap between speculative theoretical modeling and direct experiment even further.

The observer design procedure employed in this paper is based on two assumptions. On the one hand, the system must be transformable into (3)-(4). By this, the system is decomposed into two subsystems, where the state of the first subsystem is

known from measurement and the second subsystem does not explicitly depend on the input signal. On the other hand, the second subsystem must have a special stability property. If these assumptions hold, our design method can also be applied to other systems outside of cell biology.

The stability result of the observer is based on the assumption that the voltage is observed noiselessly. We showed by simulation that the suggested estimation scheme also works under noisy measurement, even though the estimated current signal does not have the same quality as in the unperturbed case. The attenuation of these disturbances as well as the adaption of model parameters will be subject of further research.

REFERENCES

[1] P. Dayan, L. F. Abbott, "Theoretical Neuroscience: Computational and Mathematical Modeling of Neural Systems", Cambridge, MA: MIT Press, USA, 2001, ISBN: 978-0262100533.

[2] E. M. Izhikevich, "Dynamical Systems in Neuroscience: The Geometry of Excitability and Bursting", Cambridge, MA: MIT Press, USA, 2007, ISBN: 978-0262090438.

[3] D. Johnston, S. M. Wu, "Foundations of Cellular Neurophysiology", Cambridge, MA: MIT Press, USA, 1995, ISBN: 978-0-262-100533.

[4] A. A. Prinz, L. F. Abbott, E. Marder, "The dynamic clamp comes of age", Trends in Neurosciences, Vol. 27, No. 4, 2004, pp. 218-224.

[5] A. L. Hodgkin, A. F. Huxley, "A quantitative description of membrane current and its application to conduction and excitation in nerve", Journal of Physiology, Vol. 117, 1952, pp. 500-544.

[6] B. L. Walcott, M. J. Corless, S. H. Zak, "Comparative study of non-linear state-observation techniques", International Journal of Control, Vol. 45, No. 6, 1987, pp. 2109–2132.

[7] E. A. Misawa, J. K. Hedrick, "Nonlinear observers — a state-of-the art survey", Journal Dynamic Systems, Measurement, and Control, Vol. 111, 1989, pp. 344-352.

[8] H. Nijmeijer, T. I. Fossen, Eds., "New Directions in Nonlinear Observer Design", Lecture Notes in Control and Information Science, Vol. 244, London: Springer, UK, 1999, ISBN: 1-852-331348.

[9] G. H. Hostetter, J. S. Meditch, "On the generalization of observers to systems with unmeasurable, unknown inputs", Automatica, Vol. 9, 1973, pp. 721-724.

[10] K. K. Sundareswaran, P. J. McLane, M. M. Bayoumi, "Observers for linear systems with arbitrary plant disturbances", IEEE Transactions on Automatic Control, Vol. 22, No. 5, 1977, pp. 870–871.

[11] M. Hou, R. J. Patton, "Input observability and input reconstruction", Automatica, Vol. 34, No. 6, 1998, pp. 789-794.

[12] J. Moreno, "Unknown input observers for SISO nonlinear systems", Proc. 39th Conf. on Decision and Control, Sydney, Australia, Vol. 1, 2000, pp. 790-801.

[13] E. Rocha-Cozatl, J. Moreno, "Passivity and unknown input observers for nonlinear systems", Proc. 15th Triennial World Congress of the International Federation of Automatic Control, Barcelona, Spain, 2002.

[14] M. Hasler, "Engineering chaos for encryption and broadband communication", Philosophical Transactions of the Royal Society of London, Series A, Vol. 353, 1995, pp. 115-126.

[15] U. Feldmann, "Synchronization of Chaotic Systems", Dissertation, Technische Universität Dresden, Germany, 1995.

[16] U. Feldmann, M. Hasler, W. Schwarz, "Communication by chaotic signals: the inverse system approach", International Journal of Circuit Theory and Applications, Vol. 24, No. 5, 1996, pp. 551–579.

[17] J. Birk, "Rechnergestutzte Analyse und Synthese nichtlinearer Beobachtungsaufgaben", VDI-Fortschrittsberichte, Reihe 8: Meß-, Steuerungs- und Regelungstechnik, Vol. 294, Düsseldorf: VDI-Verlag, Germany, 1992, ISBN: 3-18-149408-9.

[18] A.Y. Shumsky, "Observer based online parameter estimation in nonlinear systems", Proc. 13th IFAC World Congress, San Francisco, CA, USA, 1996, pp. 429-434.

[19] A. Halme, "Recursive identification of nonlinear systems by the direct", in J.E. Marshall, W.E. Collins, C.J. Harris, & D.H. Owens, Third IMA Conference on Control Theory, London: Academic Press, UK, 1981, ISBN: 012-4739601.

[20] D.G. Luenberger, "Observing the state of a linear system", IEEE Transactions on Military Electronics, Vol. 8, No. 2, 1964, pp. 74-80.

[21] D.G. Luenberger, "Observers for multivariable systems", IEEE Transactions on Automatic Control, Vol. 11, No. 2, 1966, pp. 190-197.

[22] J. O'Reilly, "Observers for linear Systems", Orlando, FL: Academic Press, USA, 1983, ISBN: 0125-277806.

[23] F. E. Thau, "Observing the state of nonlinear dynamical systems", International Journal of Control, Vol. 17, No. 3, 1973, pp. 471-479.

[24] S. Raghavan, J. K. Hedrick, "Observer design for a class of nonlinear systems", International Journal of Control, Vol. 59, No. 2, 1994, pp. 515-528.

[25] R. Rajamani, "Observers for Lipschitz nonlinear systems", IEEE Transactions on Automatic Control, Vol. 43, No. 3, 1998, pp. 397-401.

[26] J.P. Gauthier, H. Hammouri, S. Othman, "A simple observer for nonlinear systems - application to bioreactors", IEEE Transactions on Automatic Control, Vol. 37, No. 6, 1992, pp. 875-880.

[27] G. Ciccarella, M. Dalla Mora, A. Germani, "A Luenberger-like observer for nonlinear systems", International Journal of Control, Vol. 57, No. 3, 1993, pp. 537-556.

[28] A. J. Krener, A. Isidori, "Linearization by output injection and nonlinear observers", Systems & Control Letters, Vol. 3, 1983, pp. 47-52.

[29] D. Bestle, M. Zeitz, "Canonical form observer design for non-linear time-variable systems", International Journal of Control, Vol. 38, No. 2, 1983, pp. 419-431.

[30] M. Zeitz, "The extended Luenberger observer for nonlinear systems", Systems & Control Letters, Vol. 9, 1987, pp. 149-156.

[31] A. Isidori, “Nonlinear Control Systems: An Introduction”, London: Springer, UK, 1995, ISBN: 3-540-19916-0.

[32] G. L. Amicucci, S. Monaco, “On nonlinear detectability”, Journal of the Franklin Institute, Vol. 335B, No. 6, 1998, pp. 1105-1123.

[33] G. Bastin, D. Dochain, “On-line Estimation and Adaptive Control of Bioreactors”, New York: Elsevier, USA, 1990, ISBN: 978-044384-305.

[34] D. Dochain, “State and parameter estimation in chemical and biochemical processes: A tutorial”, Journal of Process Control, Vol. 13, No. 8, 2003, pp. 801-818.

[35] C. Morris, H. Lecar, “Voltage oscillations in the barnacle giant muscle fiber”, Biophysical Journal, Vol. 35, No. 1, 1981, pp. 193-213.

[36] R. FritzHugh, “Impulses and physiological states in theoretical models of nerve membranes”, Biophysical Journal, Vol. 1, No. 6, 1961, pp. 445-466.

[37] J. S. Nagumo, S. Arimoto, S. Yoshizawa, “An action pulse transmission line simulating nerve axon”, Proceedings of the IRE, Vol. 50, 1962, pp. 2061-2071.

[38] R. D. Traub, R. Miles, “Neuronal networks of the hippocampus”, Cambridge: Cambridge University Press, UK, 2005, ISBN: 978-0521364812.

[39] R. D. Traub, J.G. R. Jefferys, M. Whittington, “Fast Oscillations in Cortical Circuits”, Cambridge, MA: MIT Press, USA, 1999, ISBN: 0262201186.

[40] A. Sherman, J. Rinzel, J. Keizer, “Emergence of organized bursting in clusters of pracreatic?-cells by channel sharing”, Biophysical Journal, Vol. 54, No. 3, 1988, pp. 411-425.

[41] W. Hahn, “Stability of Motion“, Berlin: Springer-Verlag, Germany, 1967, ISBN: 67-23956.

[42] P. Denbig, “System Analysis & Signal Processing”, Harlow: Addison-Wesley, England, 1998, ISBN: 0-201-17860-5.

[43] J. A. Connor, C. F. Stevens, “Prediction of repetitive firing behaviour from voltage clamp data on an isolated neurone soma”, Journal of Physiology, Vol. 213, 1971, pp. 31-53.

[44] G. B. Ermentrout, “Type I membranes, phase resetting curves, and synchrony”, Neural Computation, Vol. 8, 1996, pp. 979-1001.

[45] E. M. Izhikevich, “Class 1 neural excitability, conventional synapses, weakly connected networks, and mathematical foundations of pulse-coupled models”, IEEE Transactions on Neural Networks, Vol. 10, 1999, pp. 499-507.

[46] J. Rinzel, B. Ermentrout, “Analysis of neural excitability and oscillations”, in C. Koch, & I. Segev, Methods in Neuronal Modeling: From Synapses to Networks, Cambridge, MA: MIT Press, USA, 1998, pp. 251-292.

[47] The MathWorks, Inc. Using Simulink®, 2005.

Biographies

Klaus Röbenack was born in Halle/Saale, Germany in 1967. He received his Dipl.-Ing. and Dr.-Ing. degrees in electrical engineering from the Technische Universität Dresden in 1993 and 1999, respectively. Additionally, he received the Dipl.-Math. degree with honours in 2002 and the university teaching qualification (Dr.-Ing. habil.) in 2005. Dr. Röbenack is currently associated with the Institut für Regelungs- und Steuerungstheorie at Technische Universität Dresden. His research interests include nonlinear control, observer design and scientific computing.

Pranay Goel received his B. Tech. in Engineering Physics from the Indian Institute of Technology, Mumbai, India in 1998. He also received his M.S. and Ph.D.degrees in Physics from The University of Pittsburgh in 2003. Following that, he worked as a Postdoctoral Researcher at the Mathematical Biosciences Institute, The Ohio State University. He is currently a Research Fellow at the National Institutes of Health. He has worked on a number of problems in mathematical biology. His interests include dynamical systems modeling in neuroscience, cell physiology, and recently, diabetes.